MJB FLUSH MOUNT CONTROLS

APPLICATIONS

Single function, two lever control ideal for sailboats, inboards and some Jet boats.

FEATURES

- Rugged design with classical styling and construction.
- Separate throttle and shift handles .
- Accepts 3300/33c cable for throttle and 6400/64 cables for shift.
- Durable heavy chrome finish.
- External throttle friction adjustment.
- Detent for positive neutral feel.
- Right hand, left hand or vertical installation.
- Mechanical advantage: Shift 3.63:1, Throttle 3.20:1
- Meets/exceeds all applicable industry standards.
- Designed for hard to shift older transmissions.

Single function, two lever control ideal for sailboats and inboards with hard to shift transmissions. Ideal for Jet boats that use 6400 series gate cables.

Extra long shift handle provides ample leverage while the shorter handle controls the throttle. Uses 3300/33c type cables for throttle and 6400/64 type cables for shift. For single station use only.

NOTE: It can only use 60 series shift cables with the 5/16 - 24 threaded ends.

ORDER INFORMATION

CONTROLS	PART No.
MJB Control	CH2500P
OPTIONS/SERVICE ITEMS	**PART No.**
Hand Lever Assembly, Chrome Throttle	031046-002
Ball Knob, Include 1 each red and black knobs	CA68287P
Stainless Throttle Knob (grooved)	CA69052P**
Stainless Steel Shift Knob (smooth) ** Fits most controls with 3/8-24 threaded levers.	CA69051P**
Neutral Safety Switch	047346
Mounting Hardware Kit	062307
Bearing Replacement Kit	CA68012P
Handle Replacement Kit (Throttle & Shift handles)	CA68011P
Detent/Friction Replacement Kit	CA68013P

Issue Date - Jan 2014
Issue Number - mcsa3

MJB FLUSH MOUNT CONTROLS

ORDER INFORMATION

COMPATABLE CABLES	PART No.
Universal 3300/33C Types:	
3300 cable (standard)	CC172XX/CC230XX
33C cable (midrange)	CC332XX
XTREME 3300 cable (premium)	CCX633XX
Universal 6400/64 Types	
XTREME 6400 BC cable	CCX640XX
XTREME 6400 CC cable	CCX643XX

TECHNICAL DATA

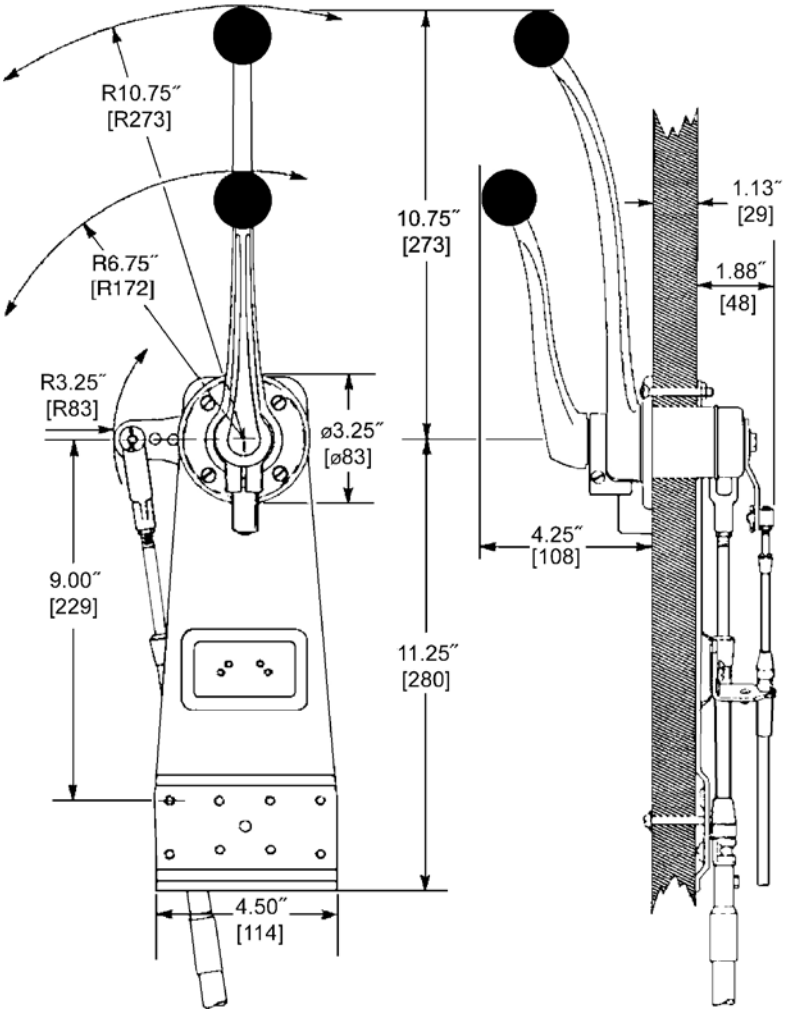

Issue Date - Jan 2014
Issue Number - mcsa3